Parts List			
Item	Part Name	Material	Mass
1	09- CUT SECTION OF SOLIDS. (~recovered)	Steel	0.022 g

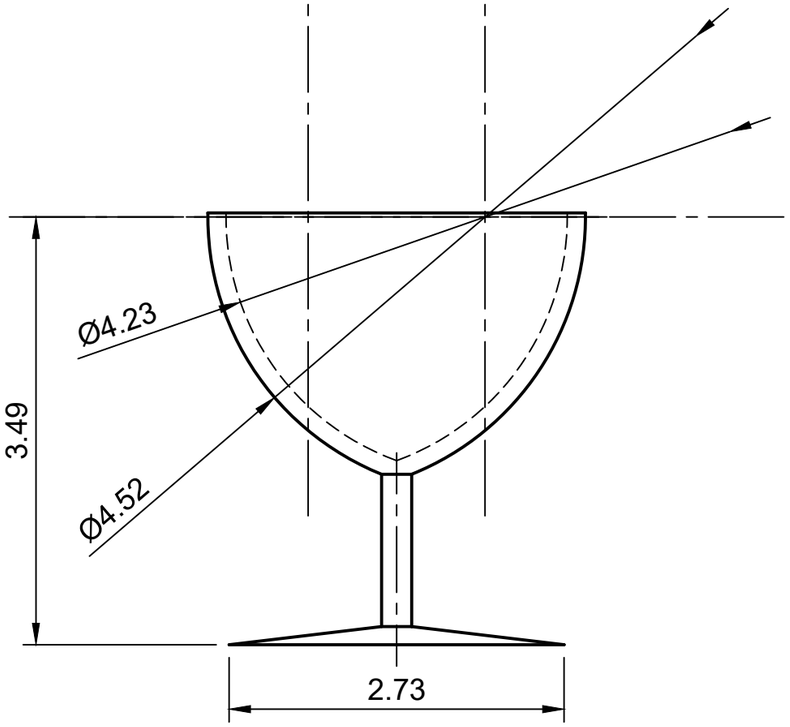

FRONT VIEW

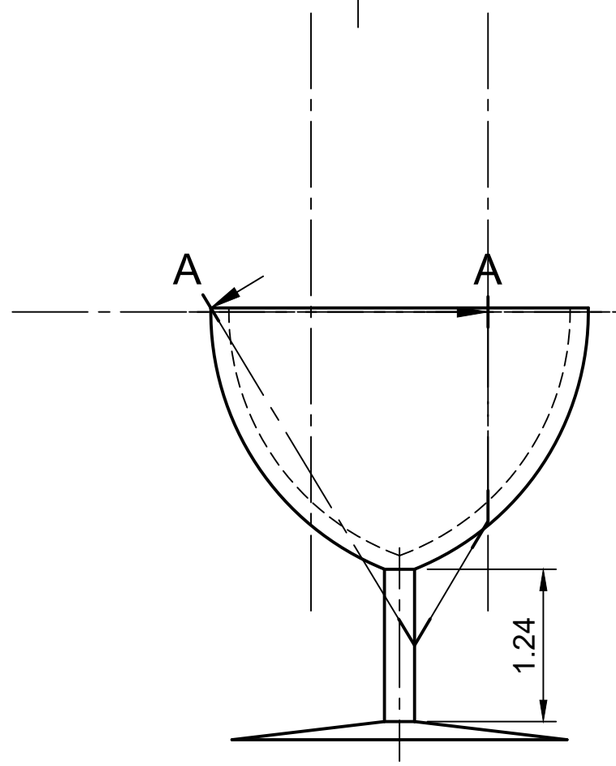

SIDE VIEW

A-A (20:1)

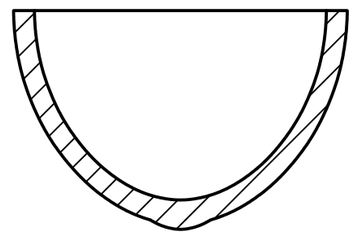

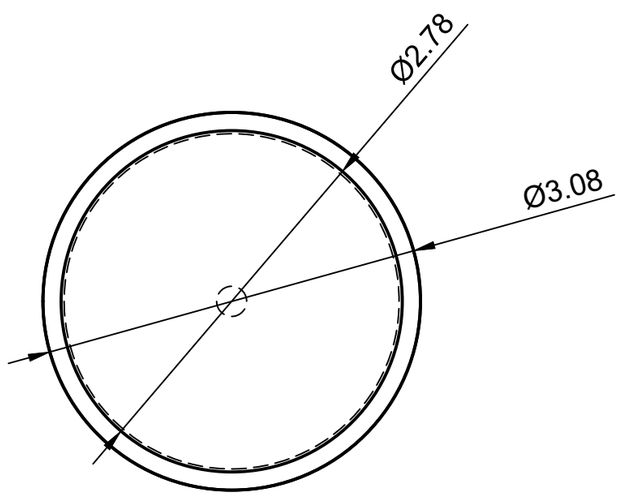

TOP VIEW

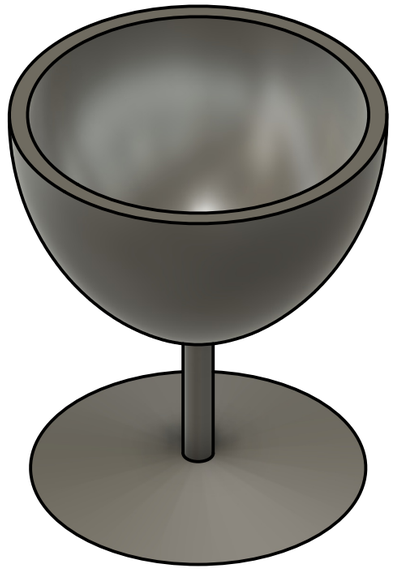

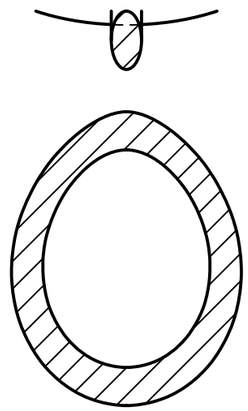

SECTION VIEW
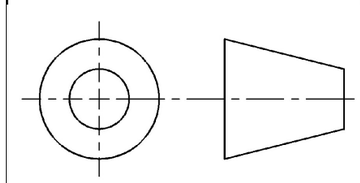
Dept.	Technical reference	Created by	Approved by
IT	212225220086	RITIKA S	Dr. SARAVANAN MP
		Document type: SECTION OF SOLIDS	Document status
		Title: 09- CUT SECTION OF SOLIDS.	DWG No.
			Rev. 4.2 / Date of issue 24-02-2026 / Sheet 9/11